TASK 5: URBAN RUNOFF TREATMENT RETROFITS
CITY OF VALLEJO BROADWAY AND REDWOOD STREETS PROJECT

BMP Type:	Vegetated Swale
Location:	East of Broadway Street between Redwood Street and Valle Vista Avenue in Downtown Vallejo
Drainage Area:	3 acres
Construction Completed:	September 2014
Total Design and Construction Cost:	$130,112

Description:	Vegetated swale between railroad tracks and Broadway Street
Specifications:	5 feet wide at the top cross-section, 1 foot wide at the bottom cross-section. 113 feet long with 8 curb cuts. Upper 18 inches of swale amended with biofiltration media to support infiltration. Bottom and side slopes planted with native bioswale sod.

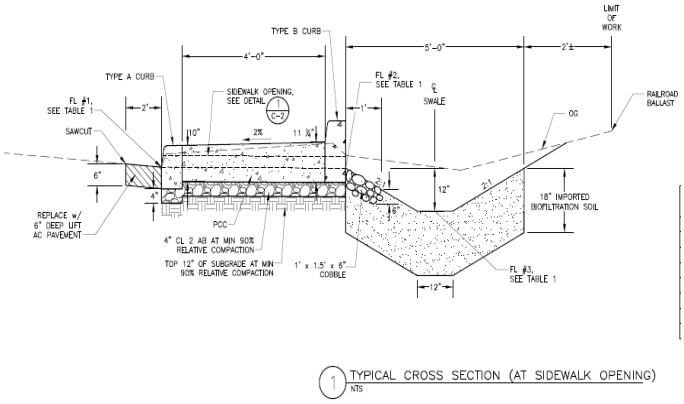

Monitoring:	Visual observations only
Monitored Dates:	1/17/16, 1/18/16, 1/21/16, 3/8/16, 3/10/16